SOLUTION SET

Chapter 12

STABLE LASER RESONATORS AND GAUSSIAN BEAMS

"LASER FUNDAMENTALS"

Second Edition

By William T. Silfvast

CH 12

1. Determine the $ABCD$ matrix for a beam translated a distance d_1, focused through a thin lens of focal length f_1, and then translated a distance d_2.

$$\begin{bmatrix} r_2 \\ \theta_2 \end{bmatrix} = \begin{bmatrix} 1 & d_2 \\ 0 & 1 \end{bmatrix} \underbrace{\begin{bmatrix} 1 & 0 \\ -1/f_1 & 1 \end{bmatrix} \begin{bmatrix} 1 & d_1 \\ 0 & 1 \end{bmatrix}} \begin{bmatrix} r_1 \\ \theta_1 \end{bmatrix}$$

$$\begin{bmatrix} r_2 \\ \theta_2 \end{bmatrix} = \begin{bmatrix} 1 & d_2 \\ 0 & 1 \end{bmatrix} \begin{bmatrix} 1 & d_1 \\ -1/f_1 & \left(-\frac{d_1}{f_1}+1\right) \end{bmatrix} \begin{bmatrix} r_1 \\ \theta_1 \end{bmatrix}$$

$$\begin{bmatrix} r_2 \\ \theta_2 \end{bmatrix} = \underbrace{\begin{bmatrix} 1-\frac{d_2}{f_1} & d_1 + d_2\left(-\frac{d_1}{f_1}+1\right) \\ -1/f_1 & \left(-\frac{d_1}{f_1}+1\right) \end{bmatrix}} \begin{bmatrix} r_1 \\ \theta_1 \end{bmatrix}$$

$$\begin{bmatrix} 1-d_2/f_1 & d_1 + d_2\left(-\frac{d_1}{f_1}+1\right) \\ -1/f_1 & \left(-\frac{d_1}{f_1}+1\right) \end{bmatrix}$$

2. A collimated beam (plane waves) arrives at a concave mirror with a focal length of 0.15 m and is then focused by the mirror. Write out the *ABCD* matrix for this process.

Translation from infinity $\Rightarrow \theta_1 = 0$ from (12.1)

$\therefore$ ABCD matrix for Translation from infinity (ray parallel to axis) is:

$$\begin{bmatrix} 1 & 0 \\ 0 & 0 \end{bmatrix}$$

Reflection at mirror:

$$\begin{bmatrix} 1 & 0 \\ -1/f & 1 \end{bmatrix} = \begin{bmatrix} 1 & 0 \\ -1/1.5 & 1 \end{bmatrix} = \begin{bmatrix} 1 & 0 \\ -6.67 & 1 \end{bmatrix}$$

Focus:

$$\begin{bmatrix} 1 & d \\ 0 & 1 \end{bmatrix}$$

Combined ABCD matrix is:

$$\begin{bmatrix} 1 & d \\ 0 & 1 \end{bmatrix} \begin{bmatrix} 1 & 0 \\ -6.67 & 1 \end{bmatrix} \begin{bmatrix} 1 & 0 \\ 0 & 0 \end{bmatrix} = \underline{\begin{bmatrix} 1 & -6.67d \\ -6.67 & 0 \end{bmatrix}}$$

3. Determine whether or not the following mirror arrangements lead to stability:

(a) two mirrors with radii of curvature of 1.8 m, separated by a distance of 2 m;

(b) one mirror with radius of curvature of 2 m and the other with radius 3 m, separated by a distance of 2.3 m;

(c) one mirror with radius of curvature 5 m and the other with radius 3 m, separated by a distance of 4 m;

(d) two mirrors with radius of curvature of 0.5 m, separated by a distance of 0.5 m.

(a) Two mirrors $R = 1.8\,m$ $d = 2\,m$

For stability, $0 < \left(1 - \frac{d}{R_1}\right)\left(1 - \frac{d}{R_2}\right) < 1$

$$\left(1 - \frac{d}{R_1}\right)\left(1 - \frac{d}{R_2}\right) = \left(1 - \frac{2}{1.8}\right)^2 = (1 - 1.11)^2 = \underline{0.121}$$

$0 < 0.121 < 1$ $\therefore$ <u>cavity is stable</u>

(b) $R_1 = 2\,m$ $R_2 = 3\,m$ $d = 2.3\,m$

$$\left(1 - \frac{2.3}{2}\right)\left(1 - \frac{2.3}{3}\right) = (-.15)(.23) = \underline{-0.0345}$$

<u>cavity unstable</u>

(c) $R_1 = 5\,m$ $R_2 = 3\,m$ $d = 4\,m$

$$\left(1 - \frac{4}{5}\right)\left(1 - \frac{4}{3}\right) = (0.2)(-0.33) = \underline{-0.067}$$

<u>cavity unstable</u>

(d) $R_1 = 0.5$ $R_2 = 0.5$ $d = 0.5$

$$\left(1 - \frac{0.5}{0.5}\right)\left(1 - \frac{0.5}{0.5}\right) = 0$$

<u>cavity on edge of stability</u>

<u>confocal cavity</u>

4. A He–Ne laser beam of wavelength 632.8 nm operating with the TEM_{00} mode and with a minimum beam waist of 0.2 mm propagates a distance of 2 m from the location of the minimum beam waist (within the laser cavity) and is incident upon a lens with focal length 50 mm. Determine the location of the focus of the beam using the complex beam parameter.

$$\begin{bmatrix} A & B \\ C & D \end{bmatrix} = \begin{bmatrix} 1 & z_2 \\ 0 & 1 \end{bmatrix} \begin{bmatrix} 1 & 0 \\ -1/f & 1 \end{bmatrix} \begin{bmatrix} 1 & z_1 \\ 0 & 1 \end{bmatrix}$$

$$= \begin{bmatrix} 1 - z_2/f & \left[\left(1 - \frac{z_2}{f}\right) z_1 + z_2\right] \\ -1/f & \left(-z_1/f + 1\right) \end{bmatrix}$$

$$\frac{1}{q_1} = \frac{1}{R(z_1)} - j\frac{\lambda}{n\pi W^2(z_1)} = -j\frac{\lambda}{n\pi W^2(z_1)}$$ since $R(z_1) = \infty$

$$\frac{1}{q_2} = \frac{C + D\left(\frac{1}{q_1}\right)}{A + B\left(\frac{1}{q_1}\right)} = \frac{-\frac{1}{f} + j\left(\frac{z_1}{f} - 1\right)\frac{\lambda}{\pi W^2(z_1)}}{1 - \frac{z_2}{f} - j\left[\left(1 - \frac{z_2}{f}\right)z_1 + z_2\right]\frac{\lambda}{\pi W^2(z_1)}} = \frac{1}{R(z_2)} - j\frac{\lambda}{\pi W^2(z_2)}$$

but $W(z_1) = W_0$ $\therefore$ $$\frac{1}{R(z_2)} = \frac{-\frac{1}{f}\left(1 - \frac{z_2}{f}\right) - \left(\frac{z_1}{f} - 1\right)\left[\left(1 - \frac{z_2}{f}\right)z_1 + z_2\right]\frac{\lambda^2}{\pi^2 W_0^4}}{\left(1 - \frac{z_2}{f}\right)^2 + \left[\left(1 - \frac{z_2}{f}\right)z_1 + z_2\right]^2\left(\frac{\lambda}{\pi W_0^2}\right)} = 0$$

$$-\frac{1}{f}\left(1 - \frac{z_2}{f}\right) - \left(\frac{z_1}{f} - 1\right)\left[\left(1 - \frac{z_2}{f}\right)z_1 + z_2\right]\frac{\lambda^2}{\pi^2 W_0^4} = 0$$

or $$z_2\left[\frac{1}{f^2} + \frac{\lambda^2}{\pi^2 W_0^4}\left(\frac{z_1}{f} - 1\right)^2\right] = \frac{1}{f} + \frac{z_1\lambda^2}{\pi^2 W_0^4}\left(\frac{z_1}{f} - 1\right)$$

$$z_2\left[\frac{1}{(0.05)^2} + \frac{(632.8\times10^{-9})^2}{\pi^2(0.2\times10^{-3})^4}\left(\frac{2}{0.05} - 1\right)^2\right] = \frac{1}{0.05} + \frac{2(632.8\times10^{-9})^2}{\pi^2(0.2\times10^{-3})^4}\left(\frac{2}{.05} - 1\right)$$

$$3.9\times10^4 z_2 = 2\times10^3$$

$$z_2 = 51.3\times10^{-3}\,\text{m}$$

$$= \underline{51.3\ \text{mm}}$$

5. A Gaussian beam of wavelength 800 nm is measured to have a wavefront curvature of 3 m and is known to have a beam waist somewhere of 0.75 mm. At that location, how far is the beam from its minimum?

$\lambda = 800\ \text{nm}$ $\quad n = 1$ (air) $\quad R(z_1) = 3\ \text{m}$ $\quad W(z_1) = 7.5\times10^{-4}\ \text{m}$

$$\frac{1}{q_1} = \frac{1}{R(z_1)} - j\frac{\lambda}{n\pi W^2(z_1)} = \frac{1}{3\ \text{m}} - j\frac{800\times10^{-9}\ \text{m}}{1\ \pi(7.5\times10^{-4}\ \text{m})^2} = 0.33 - 0.453j$$

For propagation a distance z in free space $A=1, B=z, C=0, D=1$

$$\therefore \text{ from (12.68) } \frac{1}{q_2} = \frac{0 + \frac{1}{q_1}}{1 + z/q_1} = \frac{1}{q_1 + z}$$

but at the minimum beam waist (at focus):

$$\frac{1}{q_2} = \frac{1}{\infty} - j\frac{\lambda}{n\pi W_0^2} = -j\frac{\lambda}{\pi W_0^2} \quad \text{since } n = 1$$

$$\therefore \frac{1}{q_1 + z} = -j\frac{\lambda}{\pi W_0^2} \quad \text{but } \frac{1}{q_1} = 0.333 - 0.453j$$

or $q_1 = 1.05 + 1.43j$

$$\therefore \frac{1}{1.05 + 1.43j + z} = -j\frac{\lambda_0}{\pi W_0^2}$$

$$\text{or } \frac{1\ (1.05 + z - 1.43j)}{(1.05 + z + 1.43j)(1.05 + z - 1.43j)} = -j\frac{\lambda}{\pi W_0^2}$$

equating real and imaginary parts (here we only need the real part) we find that:

$$1.05 + z = 0 \Rightarrow z = -1.05\ \text{m}$$

negative sign indicates the direction

6. How many transverse modes are lasing in a He–Cd 325-nm laser with a confocal cavity if the beam diameter is measured to be 0.1 m at a distance of 3 m from the center of the cavity and the minimum beam waist is 50 μm? *Hint:* Use M^2.

$$W^2(z) = W_0^2 + M^4 \frac{\lambda^2}{\pi^2 W_0^2}(z - z_0)^2$$

$W_0 = 50\ \mu m = 50 \times 10^{-6}\ m \qquad \lambda = 325 \times 10^{-9}\ m$

$W(z) = \frac{0.1}{2} = 0.05\ m$ at $z = 3\ m$

$\therefore\ z - z_0 = 3\ m$

plug in and solve for M^2

$$W^2(z) - W_0^2 = \frac{\lambda^2}{\pi^2 W_0^2}(z - z_0)^2 M^4$$

$$(0.05)^2 - (50 \times 10^{-6})^2 = \frac{(325 \times 10^{-9})^2 (3)^2 M^4}{\pi^2 (50 \times 10^{-6})^2}$$

$$(5 \times 10^{-2})^2 - (50 \times 10^{-6})^2 = 3.85 \times 10^{-5} M^4$$

$\therefore\ M^4 = 64.935$

and $M^2 = 8.06$

$\therefore$ modes up to the 8th order are operating in this laser (i.e. at least one of the p, q have a number as high as 8 in (11.53).

7. A laser cavity is constructed with a pair of mirrors having a 2-m radius of curvature, separated by a distance of 1.8 m. Determine if the cavity is stable. If a 0.2-m focal length thin lens is mounted directly in front of the laser output mirror, where will it focus and what will be the focal spot size? The laser is an Ar^+ laser operating at 514.5 nm.

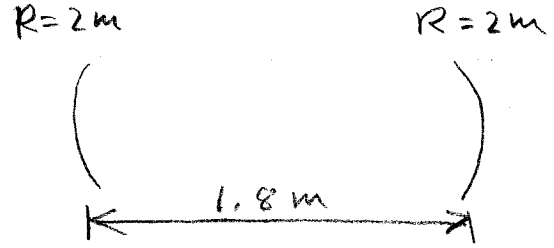

$\lambda = 514.5\,nm$
$n = 1$

$$g_1 = g_2 = \left(1 - \frac{d}{R}\right) = \left(1 - \frac{1.8}{2}\right) = 0.1$$

$\therefore\ g_1 g_2 = 0.01 = g^2$ Therefore <u>cavity is stable</u>

First solve for $W^2(z_1)$ and $R(z_1)$ where $z_1 = 0.9\,m$

For a symmetric cavity, from (12.45)

$$W^2(z_1) = \frac{d\lambda}{\pi}\left(\frac{1}{1-g^2}\right) = \frac{1.8\,(514.5\times10^{-9})}{\pi}\left(\frac{1}{1-0.01}\right)$$

$$= 2.98\times10^{-7}\,m^2$$

From (12.46) $\quad R(z_1) = z_1 + \dfrac{d(2R-d)}{4z_1} = 0.9 + \dfrac{1.8(4-1.8)}{4(.9)} = 2$

Go Through lens and Then focus

$$\begin{bmatrix} 1 & z_2 \\ 0 & 1 \end{bmatrix}\begin{bmatrix} 1 & 0 \\ -1/f & 1 \end{bmatrix} = \begin{bmatrix} 1 - z_2/f & z_2 \\ -1/f & 1 \end{bmatrix} \qquad f = 0.2$$

We want location where $R(z_2) = \infty \Rightarrow \dfrac{1}{R(z_2)} = 0$

$$\frac{-\frac{1}{f} + \frac{1}{q_1}}{1 - z_2/f + z_2/q_1} = \cancelto{0}{\frac{1}{R(z_2)}} - j\frac{\lambda}{n\pi W^2(z_2)} = -j\frac{514.5\times10^{-9}}{\pi W^2(z_2)}$$

but $\dfrac{1}{q_1} = \dfrac{1}{R(z_1)} - j\dfrac{\lambda}{n\pi W^2(z_1)} = \dfrac{1}{2} - j\dfrac{514.5\times10^{-9}}{\pi\, 2.98\times10^{-7}}$

$$= 0.5 - j(0.55) = 0.5 - 0.55j$$

$$\therefore\quad \frac{-\frac{1}{0.2} + 0.5 - 0.55j}{1 - \frac{z_2}{0.2} + z_2(0.5 - 0.55j)} = -j\frac{1.64\times10^{-7}}{W^2(z_2)}$$

(continued)

$$\frac{-4.5 - 0.55j}{1 - 5z_2 + 0.5z_2 - 0.55z_2 j} = \frac{1.64\times10^{-7}}{W^2(z_2)}\, j$$

$$= \frac{-4.5 - 0.55j}{[(1-4.5z_2) - 0.55z_2 j]} \; \frac{[(1-4.5z_2) + 0.55z_2 j]}{[(1-4.5z_2) + 0.55z_2 j]}$$

$$= \frac{-4.5(1-4.5z_2) + (0.55)^2 - [0.55(1-4.5z_2) + 4.5(0.55z_2)]j}{[\quad\quad][\quad\quad]}$$

<u>Real part</u> $= 0 \Rightarrow -4.5(1-4.5z_2) + (0.55)^2 = 0$

or $-4.5 + (4.5)^2 z_2 + (0.55)^2 = 0$

$$z_2 = \frac{4.5 - (0.55)^2}{4.5} = \underline{0.933\ m}$$

<u>Imaginary part</u>

$$\frac{-[0.55(1-4.5[0.933]) + 4.5(0.55[0.933])]j}{[(1-4.5[0.933]) - 0.55[0.933]j][(1-4.5[0.933]) + 0.55[0.933]j]}$$

$$= \frac{-514.5\times10^{-9}\, j}{\uparrow\ W^2(z_2)}$$

$$\frac{-[-1.76 + 2.31]j}{[-3.2 - 0.513j][-3.2 + 0.513j]} = -\frac{1.64\times10^{-7}}{W^2(z_2)}\, j$$

$$\frac{-0.55j}{10.24 + 0.263} = -\frac{1.64\times10^{-7}}{W^2(z_2)}\, j$$

$$0.0523 = \frac{1.64\times10^{-7}}{W^2(z_2)} \Rightarrow W^2(z_2) = 3.14\times10^{-6}$$

$$\underline{W(z_2) = 1.77\times10^{-3}\ m}$$

8. Determine the beam waist of a Gaussian beam of wavelength 632.8 nm after being translated a distance of 5 m from the location of its minimum beam waist of 100 μm, transmitted into a planar piece of glass having index of refraction of 1.5 at normal incidence, and translated another 0.1 m within the glass.

$$\begin{bmatrix} A & B \\ C & D \end{bmatrix} = \begin{bmatrix} 1 & d_2 \\ 0 & 1 \end{bmatrix} \begin{bmatrix} 1 & 0 \\ 0 & \frac{1}{n} \end{bmatrix} \begin{bmatrix} 1 & d_1 \\ 0 & 1 \end{bmatrix}$$

$$= \begin{bmatrix} 1 & d_1 + d_2/n \\ 0 & 1/n \end{bmatrix}$$

$$\frac{1}{q_1} = \frac{1}{R(z_1)} - j\frac{\lambda}{n\pi W^2(z_1)} = -j\frac{\lambda}{\pi W_0^2}$$

$$\frac{1}{q_2} = \frac{C + D/q_1}{A + B/q_1} = \frac{-\frac{1}{n}\frac{\lambda}{\pi W_0^2}j}{1 + \left(d_1 + \frac{d_2}{n}\right)\left(-j\frac{\lambda}{\pi W_0^2}\right)} = \frac{1}{R(z_2)} - j\frac{\lambda}{n\pi W^2(z_2)}$$

$$\frac{\frac{1}{n}\frac{\lambda}{\pi W_0^2}}{1 + \left(d_1 + \frac{d_2}{n}\right)^2\frac{\lambda^2}{\pi^2 W_0^4}} = \frac{\lambda}{n\pi W^2(z_2)}$$

$$W(z_2) = W_0\sqrt{1 + \left(d_1 + \frac{d_2}{n}\right)^2\frac{\lambda^2}{\pi^2 W_0^4}}$$

$$= 100\times10^{-6}\sqrt{1 + \left(5 + \frac{0.1}{1.5}\right)^2\frac{(632.8\times10^{-9})^2}{\pi^2(100\times10^{-6})^4}}$$

$$= \underline{0.0102\text{ m} = 1.02\text{ cm}}$$

9. Design a cavity for a CO_2 laser operating at 10.6 μm that would produce a beam 0.02 m in diameter ($2w$) at a distance of 2 m from the laser output mirror. State the cavity parameters that you would use for your design. Assume the laser has a gain length of 1 m.

Try a symmetrical cavity

Assume that the mirrors are at the end of the gain medium

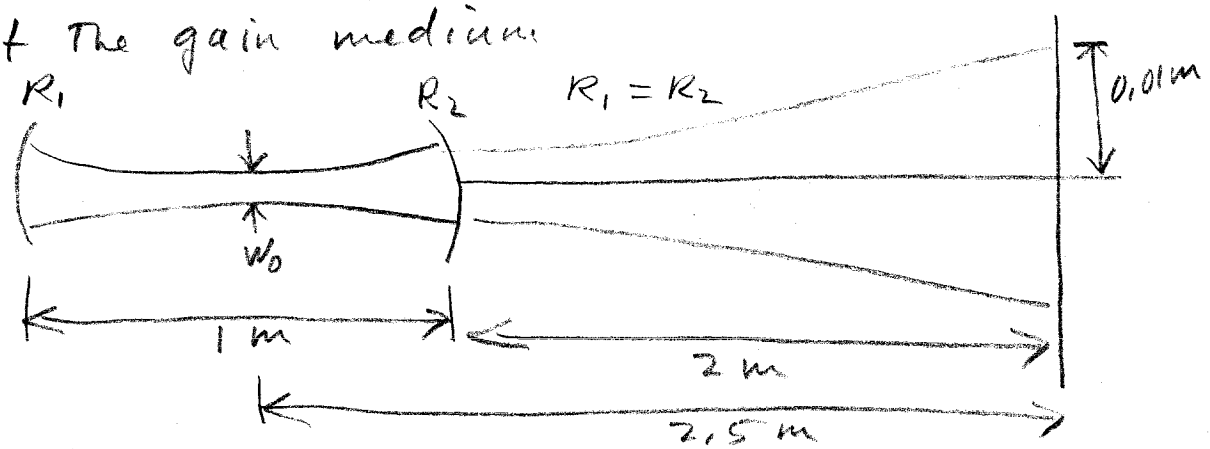

$$W(2.5) = W_0\left[1 + \left(\frac{\lambda z}{\pi W_0^2}\right)^2\right]^{1/2} = 0.01\,\text{m}$$

$$\therefore \left[1 + \frac{(10.6\times10^{-6}\,2.5)^2}{\pi^2\,W_0^4}\right]^{1/2} = \frac{0.01}{W_0}$$

$$W_0^4 - (0.01)^2 W_0^2 + 7.11\times10^{-11} = 0$$

Two solutions $\rightarrow W_0 = 8.37\times10^{-4}$ or 9.96×10^{-3}

Mirror curvature: $R(0.5\,\text{m}) = z\left[1 + \left(\frac{\pi W_0^2}{\lambda z}\right)^2\right] = 0.5\left[1 + \left(\frac{\pi W_0^2}{10.6\times10^{-6}(0.5)}\right)^2\right]$

For $W_0 = 8.37\times10^{-4}$ $\quad R(0.5) = 0.586\,\text{m}$

For $W_0 = 9.96\times10^{-3}$ $\quad R(0.5) = 1.73\times10^{3}\,\text{m}$

CH 12

10. A TEM_{00} mode He–Ne laser operating at 632.8 nm is tightly focused by a lens to arrive normal to a 12-mm–thick quartz window ($\eta = 1.46$) at exactly the focal point of the lens. At that location, the $1/e^2$ diameter of the beam intensity is 2 μm. What would be the beam diameter when it arrives at the other surface of the window?

$$W(z) = W_0 \left[1 + \left(\frac{z}{z_R}\right)^2\right]^{1/2}$$

$\lambda = 632.8\ nm$

$z = 12\ mm = 0.012\ m$

$$d = 2W_0 = 2\ \mu m \Rightarrow W_0 = 1\ \mu m = 10^{-6}\ m$$

$$z_R = \frac{\eta \pi W_0^2}{\lambda} = \frac{1.46\ \pi (10^{-6})^2}{632.8 \times 10^{-9}} = 7.25 \times 10^{-6}\ m$$

$$W(z) = 10^{-6}\left[1 + \left(\frac{0.012}{7.25 \times 10^{-6}}\right)^2\right]^{1/2}$$

$$= 1.66 \times 10^{-3}\ m$$

$$\text{diameter} = 2\ W(z) = 2\,(1.66 \times 10^{-3}\ m) = 3.32 \times 10^{-3}\ m$$

CH 12

11. A 0.1-m–long ruby laser rod is installed on earth in a symmetrical cavity with external mirrors separated by 0.2 m. This laser was measured to produce a 100-km–beam diameter on the moon, a distance of 400,000 km from earth. What radius of curvature mirrors would have to be used for the laser cavity in order to do this?

$$W^2 = W_0^2 + \frac{\lambda^2 z^2}{n^2 \pi^2 W_0^2}$$

$z = 4 \times 10^8 \text{ m}$

$W = \frac{10^5 \text{ m}}{2} = 5 \times 10^4 \text{ m}$

$$W^2 = \left(\frac{d}{2}\right)^2 = \left(\frac{10^5}{2}\right)^2 = 2.5 \times 10^9 \text{ m}^2$$

$n = 1$

$$\frac{\lambda^2 z^2}{\pi^2} = \frac{(694.3 \times 10^{-9})^2 (4 \times 10^8)^2}{\pi^2} = 7.81 \times 10^3 \text{ m}^4$$

$$2.5 \times 10^9 = W_0^2 + \frac{7.81 \times 10^3}{W_0^2}$$

W_0^2 very small compared to right hand term

Then $W_0^2 \cong \frac{7.81 \times 10^3}{2.5 \times 10^9} = 3.12 \times 10^{-6}$

and $W_0 \cong 1.77 \times 10^{-3} \text{ m} = 1.77 \text{ mm}$

Then $R = z \left[1 + \left(\frac{\pi W_0^2}{\lambda z} \right)^2 \right]$ $\quad z = 0.1 \text{ m}$

$$R = 0.1 \left[1 + \left(\frac{\pi [1.77 \times 10^{-3}]^2}{694.3 \times 10^{-9} (0.1)} \right)^2 \right]$$

$$= \underline{2.01 \times 10^3 \text{ m}}$$

CH12

12. An argon ion laser is operated cw at threshold on the 488 nm transition in a confocal laser cavity in which the mirrors are separated by a distance of 1 m. What would be the beam spot size and wavefront curvature at a distance of 100 m from the output mirror?

For a confocal cavity:

$d = 1\ m$

$\lambda = 488.0\ nm$

$$W_0 = \left(\frac{\lambda d}{2\pi}\right)^{1/2} = \left(\frac{488\times10^{-9}\,(1)}{2\pi}\right)^{1/2}$$

$$= 2.79\times10^{-4}\ m$$

$$W = W_0\left[1 + \left(\frac{\lambda z}{\pi W_0^2}\right)^2\right]^{1/2}$$

$$z = 100\ m + 0.5\ m = 100.5\ m$$

$$\therefore \quad W = 2.79\times10^{-4}\left[1 + \left(\frac{488\times10^{-9}\ 100.5}{\pi\,(2.79\times10^{-4})^2}\right)^2\right]^{1/2}$$

$$= \underline{5.60\times10^{-2}\ m}$$

$$R = z\left[1 + \left(\frac{\pi W_0^2}{\lambda z}\right)^2\right]$$

$$= 100.5\left[1 + \left(\frac{\pi\,(2.79\times10^{-4})^2}{488\times10^{-9}\,(100.5)}\right)^2\right]$$

$$= \underline{1.005\times10^2 = 100.502\ m}$$

13. Consider the cavity shown in the figure. Draw the equivalent lens diagram for this cavity. What would be the values of d/f that are stable in this cavity? Use the complex beam parameter analysis along with $ABCD$ matrices. For $d = 0.3$ m and $f = 0.5$ m, what would be the spot size at the lens for a wavelength of 500 nm?

Change the problem to $d = 0.2$m instead of $d = 0.3$m

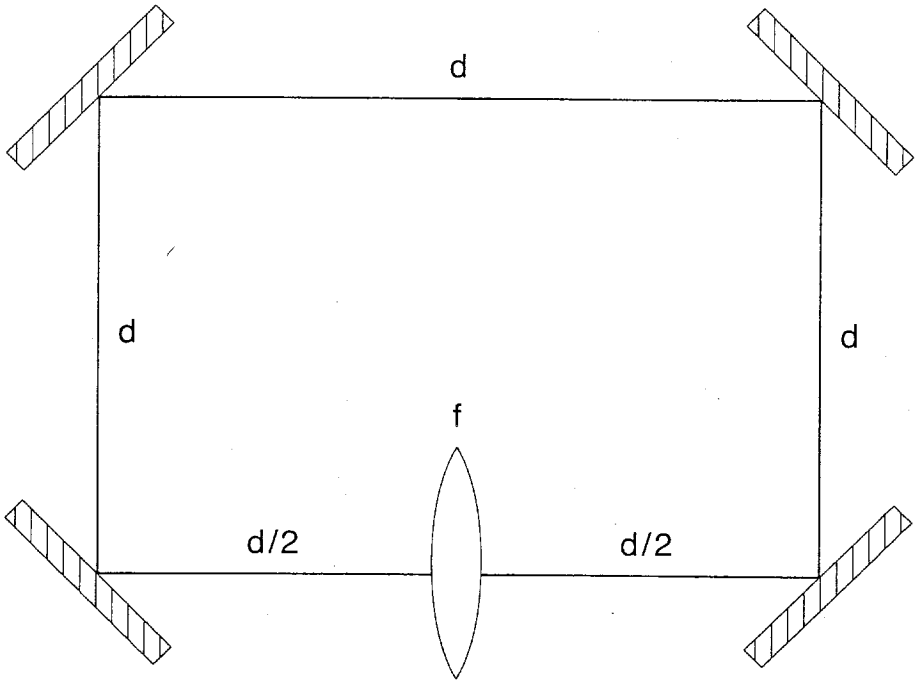

Lens equivalent:

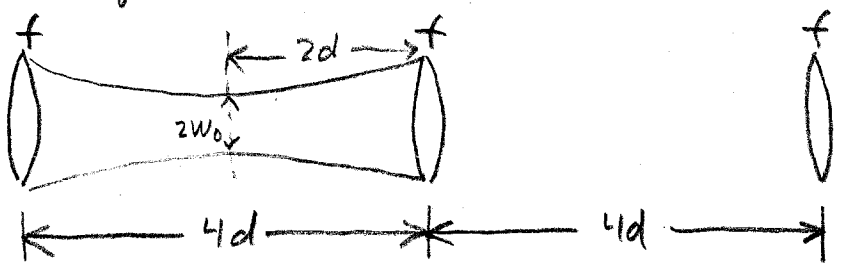

minimum beam waist at 2d (because symmetric)

For equivalent mirror cavity $f = R/2 \Rightarrow R = 2f$

$$g_1 = g_2 = \left(1 - \frac{d_{eff}}{R}\right) = \left(1 - \frac{4d}{2f}\right) = \left(1 - \frac{2d}{f}\right)$$

stable for $\underline{0 < \left(1 - \frac{2d}{f}\right)^2 < 1}$

$d = 0.2$m $\quad 4d = 0.8$m $\quad R = 2f = 2(0.5) = 1$m

$$g = 1 - \frac{2d}{f} = 1 - \frac{2(0.2)}{.5} = 1 - \frac{0.4}{0.5} = 0.2$$

(continued)

13. (cont.)

For symmetric cavity:

$$W_0^2 = \frac{\lambda}{2\pi}\left[d_{eff}(2R - d_{eff})\right]^{1/2}$$

$$= \frac{500\times10^{-9}}{2\pi}\left[0.8(2-0.8)\right]^{1/2}$$

$$= 7.80\times10^{-8}$$

$$W_0 = 2.79\times10^{-4}\,m = \underline{0.279\,mm}$$

at the lens, $W^2 = \frac{d_{eff}\lambda}{\pi}\left(\frac{1}{1-g^2}\right)$

$$= \frac{(0.8)500\times10^{-9}}{\pi}\left(\frac{1}{1-0.04}\right)$$

$$= 1.32\times10^{-7}$$

$$\therefore \quad W = 3.64\times10^{-4}$$

Spot size $= 2W = 7.28\times10^{-4}\,m = \underline{0.728\,mm}$